## Feature

- 15" 1024 x 768 TFT LCD
- Intel® Atom Dual Core N2600 1.6GHz Processor
- 1 x SO-DIMM, max. 4GB DDR3 800/1066
- 2 x Isolated RS422/485 (optional)
- Integrated Dual Broadcom BCM57780 GbE Controller
- Isolated Power Module

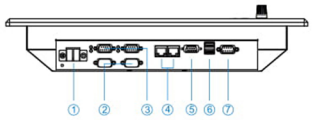


1. 1 x 9~36V DC input
2. 2 x RS232
3. 2 x Isolation-RS422/485 (optional)
4. 2 x RJ45
5. 1 x VGA out put
6. 2 x USB
7. 1 x RS232/422/485

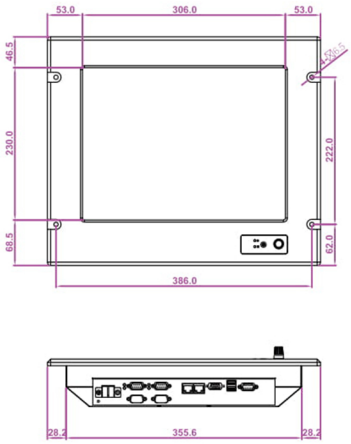


FRONT VIEW

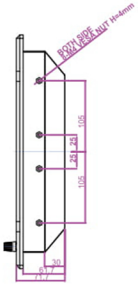


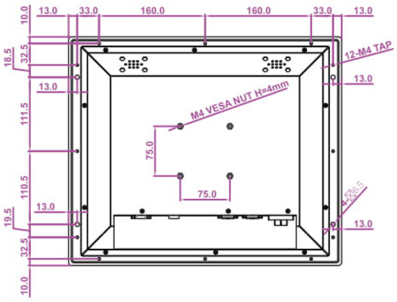


SIDE VIEW

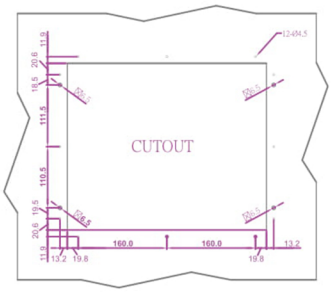


CUT OUT DIMENSION

* Note: this is a simplified drawing and some components are not marked in detail. *Please contact our sales representative if you need further product information.

### TFT Characteristics :

| | |
|---|---|
| Pixel Number | : 1024 x 768 |
| Pixel Pitch(R&B) | : 0.297 (H) x 0.297 (V) mm |
| Contrast Ratio | : 700:1(typ.) |
| Panel Brightness | : 400cd/m2 (typ.) |
| Viewable Angle | : -80 ~ 80(H) ; -60 ~ 80(V) |
| Active Display Area | : 304 (H) x 228 (V) mm |
| Max Colors | : 16.2 (M) / 8 bit / colors |

### SBC Specifications :

| | |
|---|---|
| Processor | : Intel® Atom Dual Core N2600 1.6GHz |
| BIOS | : AMI 4Mbit Flash |
| System Chipset | : Intel® NM10 express chipset |
| Memory Slot | : 1 x DDR3 800/1066MHz SODIMM,(Max 4GB) |
| Graphic Chipset | : Intel® Graphic Accelerator 3650 |
| Storage | : 1 x SATA2, 1 x Mini PCIe slot (mSATA SSD) |
| Ethernet | : 2x RJ-45(1000 Gigabit Ethernet Compatible) |
| VGA | : 1x VGA Connector |
| Audio | : Realtek ALC886 HD Audio Codec |
| USB Ports | : 6 x USB 2.0 (4 x USB by pin-header) |
| Serial Ports | : 4 x RS232, 1 x RS232/422/485 |
| DVI | : 1 x DVI by 2x10 DB-13 wafer connector |

### Power Specifications :

| | |
|---|---|
| Power Supply Options | : 9 to 36 V DC power supply with Terminal block (Default) |
| Power Consumption | : 40 W , Max operation |

### Mechanical and Environmental

| | |
|---|---|
| Mechanical Mounting | : Panel (Flush) mount with IP66 , VESA, Bracket mounting |
| Operating Temperature | : -15 to 55 deg.C |
| Operating Humidity | : 5% to 95%(non condensing) |
| Anti-Vibration | : 5Hz~500Hz / 1Grms / 3 Axis |
| Anti-Shock | : 15G,11ms duration |

### Input / Output Connectors

| | |
|---|---|
| Ethernet LAN | : 2 x RJ45-10/100/1000 Mbps |
| COM | : 2 x RS232, 1 x RS232/422/485 |
| Isolated RS422/485 | : 2 x Isolated RS422/485 COM (optional) |
| USB | : 2 x USB Type-A receptable |
| VGA output | : 1 x VGA 15P D-SUB (female) |
| DC Power | : 1 x DC Terminal block |

### Available Options

| | |
|---|---|
| Touch Screen Options | : 5 Wire Resistive |
| AR Safety Glass Options | : 3mm Anti-reflective protection glass |
| Bracket Stand options | : Yes(One robust bracket can adjust from -10 to 30 deg.) |
| Secondary SSD | : up to 256 GB mSATA SSD |

### Certification and Approvals

- CE, FCC, DNV2.4

Note: All Specifications are subject to change without prior notice!

Revised Date : 18-Nov-2019 V1.4

Şerifali Mah. Bayraktar Bulvarı Adil Sokak No: 36
Y. Dudullu Ümraniye / İstanbul

E: info@valen.com.tr
W: valen.com.tr

T : +90 216 348 82 58
F : +90 216 447 52 98